Engineered Wood Stile & Rail

Door Construction & Process Details

Prepare Engineered Wood Stiles & Rails.

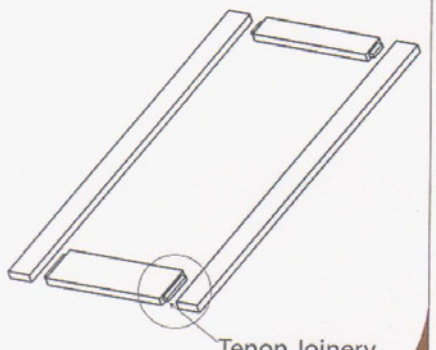

1

Assemble & Glue Stiles & Rails.

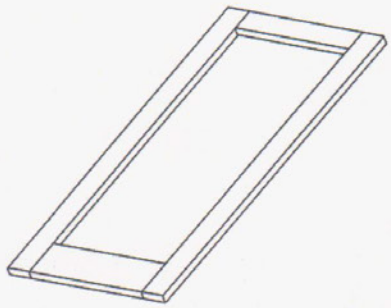

2

Glue (1/8") HDF on Front & Back of Stiles & Rails.

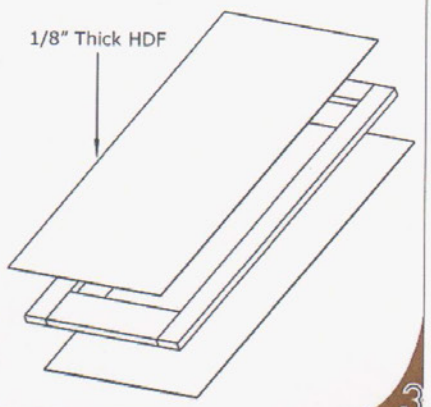

3

Fully Assembled Door Panel.

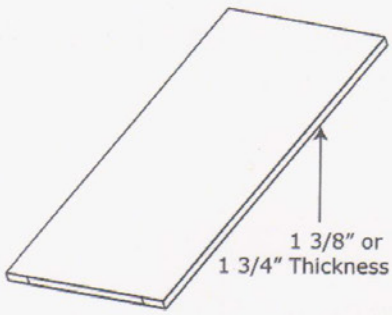

4

Cut Opening Inside Stiles & Rails with Router.

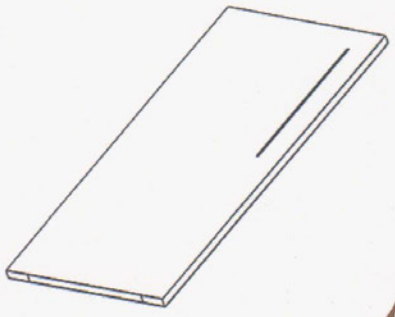

5

Apply Directional Wood Veneers to Faces & Edgebanding to outside edges of Door.

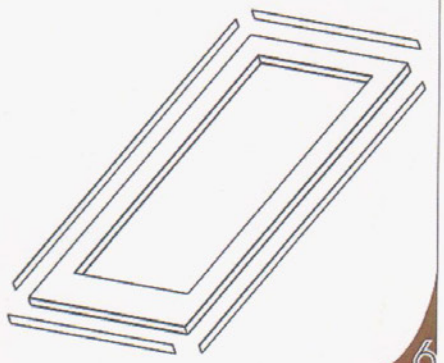

6

Assemble Front Molding & Prep door for Hardware.

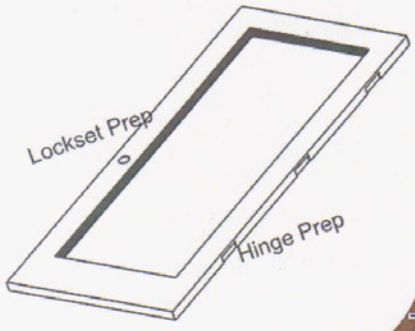

7

Factory Finish-Paint or Stain.

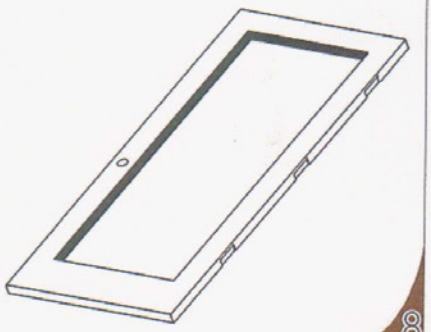

8

Assemble Door (Wood or Glass) Panel plus back molding. Completed Door.

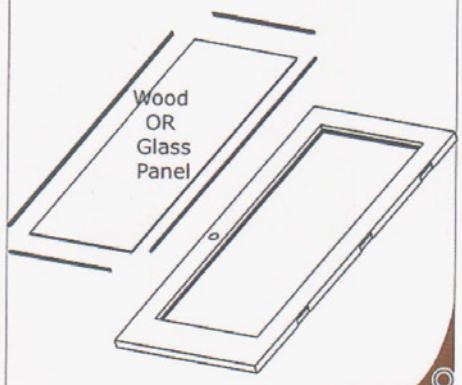

9

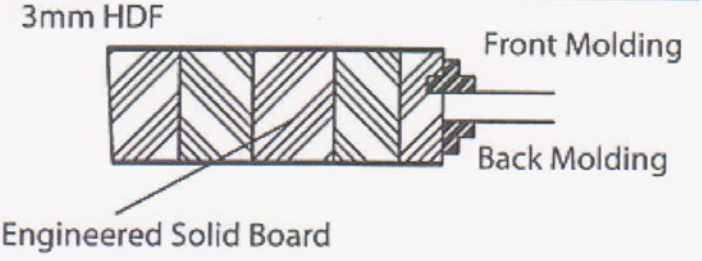

For More Information or Inquiries: > SALES@DANIELSINTL.COM

Products supplied by Direct Source Interiors, Inc.